Specification Sheet

EasyPIT® ULTRA

600×450 Access Chamber

Product Description

The EasyPIT® ULTRA duct access chamber system is a quick-build, structural alternative to traditional concrete or brick-built chambers.

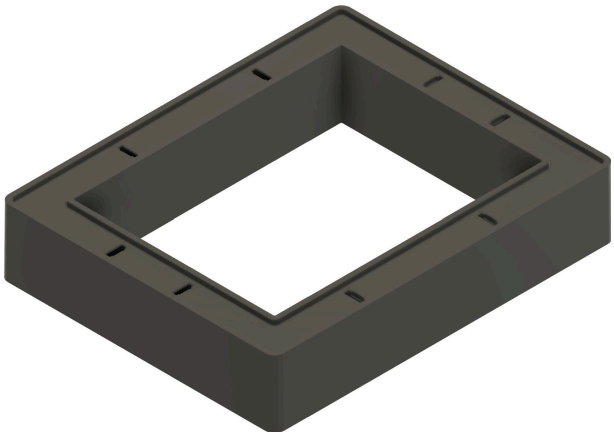

Product Details

Clear Opening	**600×450**
External Dimensions	**770×620**
Stacking Depth	**150**
Product Code	**EPIT6045D**
Unit Weight	**6.5**

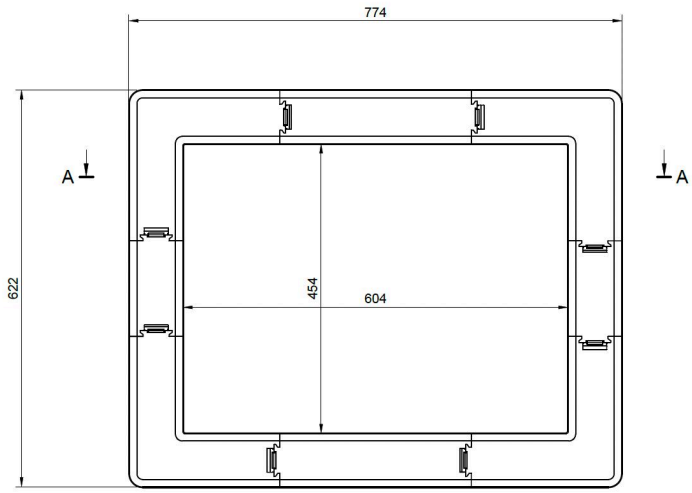

Installation

EasyPIT® ULTRA has been tested to withstand vertical loads of EN124. Please refer to the EasyPIT® ULTRA Installation Guide for installation details.

Key Features

Twin-wall design provides a full bedding area for any access cover and frame

Ideal for use as cable drawpits, duct access, valve chambers, meter chambers and Highway MCX chambers

Tested to BSEN124 D400 loadings.

Manufactured from 100% recycled raw materials

Material Properties

Material Property	Glass Reinforced r-PP	Unit	Black
Density	ISO 1183	g/cm³	1.14
Tensile Strength	ISO 527-2/1A	MPa	78.22
Tensile Strain @ Break	ISO 527-2/1A	%	3
Tensile Modulus	ISO 527-2/1A	MPa	6300
Charpy Unnotched Impact	ISO 179/1eU	kJ/m²	30
Charpy Notched Impact	ISO 179/1eU	kJ/m²	9
Izod Notched Impact	ISO 180	kJ/m²	10
Heat Distortion Temp @ 0.45MPa	ISO75-2/B	°C	>140
Flame Rating (Not UL listed)	Internal Test (UL94)	*	HB (1.6mm)

Advanced Infrastructure Systems Ltd
Shropshire House, Hortonwood 1, Telford,
Shropshire, TF1 7GN , United Kingdom

+44 (0)1952 504288
sales@advancedinfrastructure.com
www.advancedinfrastructure.com

Disclaimer : Advanced Infrastructure Systems Ltd Reserves the right to make changes to this document